TechMotion AutomationTechnology(Suzhou)Co.,Ltd.
Address: No.55 DongFu Road,SIP,Suzhou,Jiangsu,215124 P.R.China
Tel: 0512-6591 0867
Fax: 0512-6591 0847
E-Mail: sales@tech-motion.net
Web: www.tech-motion.net

A Subsidiary of AVTEC Ltd.

SIROS®

Evolvere®-Direct Drive

This system combines a torque motor with high power density, a high precision motor feedback system as well as a stiff cross roller bearing. By optimizing the design it was possible to reach a maximum hollow shaft diameter. The ASSAG EVOLVERE® Direct Drive is compatible to controllers of renowned supplier such as Fanuc and Siemens.

Technical specifications:

Antrieb *Actuator*		Einheit *Unit*	ohne Kühlmantel / *without Cooling Jacket* Version A	ohne Kühlmantel / *without Cooling Jacket* Version B	mit Kühlmantel / *with Cooling Jacket* Version A	mit Kühlmantel / *with Cooling Jacket* Version B
Spitzendrehmoment *Peak torque*	Tp	Nm	380	309	380	309
Dauerdrehmoment *Continuous torque*	Tc	Nm	73	65.6	160	169
Stillstandsmoment *Stall torque*	Ts	Nm	73	49.8	150	133
Drehmomentkonstante *Torque constant*	Kt	Nm/Arms	10	15.6	10	15.6
Maximale Drehzahl *Maximum Speed*		rpm	300	450	300	450
Spannungskonstante (L-L, 20°C) *Back EMF constant (L-L, 20°C)*	Ku	Vrms/(rad/s)	13.5	9	13.5	9
Motorkonstante *Motor constant*	Km	Nm/√W	4.13	4.44	4.13	4.44
Anzahl Pole *Number of poles*			32	44	32	44
Widerstand (L-L, 20°C) *Resistance (L-L, 20°C)*	R20	Ω	2.59±5%	8.19	2.59±5%	8.19
Induktivität (L-L, 20°C) *Inductance (L-L, 20°C)*	L1	mH		41.9		39.5
Spitzenstrom *Peak current*	Ip	Arms	48.1	28.1	48.1	28.1
Dauerstrom *Continuous current*	Ic	Arms	8.2	4.28	18.2	11.7
Stillstandstrom *Stall current*	Is	Arms	8.2	3.24	16.7	8.85

Version A: Temperature monitoring by integrated thermistor.
Version B: Individual temperature monitoring of each winding

SWISS CERTIFICATION ISO 9001:2008

Measurements

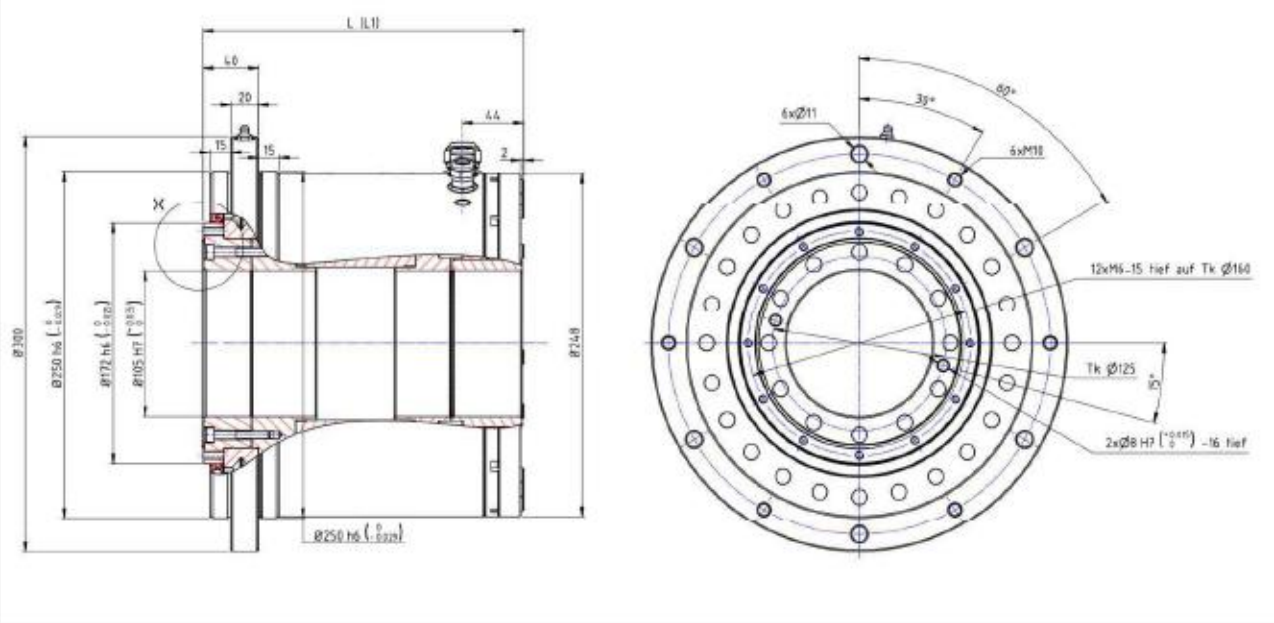

Version	Blechpaket / *Iron core*	L [mm]	L1 [mm] mit Bremse / *with brake*
A	30	k.A.	k.A.
	50	k.A.	k.A.
	70	215	231
	...	...	...
B	30	k.A.	k.A.
	50	k.A.	k.A.
	70	234	250
	...	...	...

Ordering code

Baureihe *Serie*	Baugrösse *Size*	Version	Blechpaket *Iron core*	Messsystem *Feedback system*	Kühlmantel *Cooling jacket*	Bremse *Brake*	Spezialausführung *Customized version*
SIROS®	300	A	30	B18	C	B	X
				B26			
			50	F23			
				F27			
		B	70	M23	-	-	
				M27			
			...	S26			
				S29			
SIROS	**-**	**300A**	**-**	**70**	**-**	**F23**	**-** **C** **-** **B** **-** **X**

Motor Feedback System

Bezeichnung *Designation*	Protokoll *Protocol*	Auflösung *Resolution*
B18	BiSS	18 bit
B26		26 bit
F23	FANUC	High Type A (23 bit)
F27		High Type B (27 bit)
M23	Mitsubishi	23 bit, 4 wire
M27		27 bit, 4 wire
S26	Siemens DRIVE-CLiQ	26 bit
S29		29 bit

FANUC

SIEMENS